THE BIOCHEMISTRY OF MICROBIAL FUEL CELLS

Universitat Autònoma de Barcelona

Author : Adrian Martin Carnero Tutor: Jordi Mas Grau en Bioquímica

1.INTRODUCTION

This work is a bibliographic recompilation about an issue that concerns to several fields of our society (science, technology and renewable energies. There are some devices called **Microbial Fuel cells (MFC)** that harness the specific feature of extruding electrons to the extracellular space in order to produce electric energy with organic compound found in waste water as carbon source. However, in this study we will specifically go through the **biochemistry of the processes** occurring in these microorganisms. The MFC technologies represent the newest approach for generating bioelectricity from biomass using bacteria. If we can optimize the biochemistry of those microorganisms to a relative high level, this kind of technology would supply energetically several aspects in our lives with relatively low costs.

2.THE MFC DEVICES

2 reaction chambers
- Anaerobic anode chamber
- Aerobic cathode chamber

1 Anode and 1 cathode
1 Proton selective membrane
A batch feed flow system
Oxygen supply device
Load
Wires
Carbon source

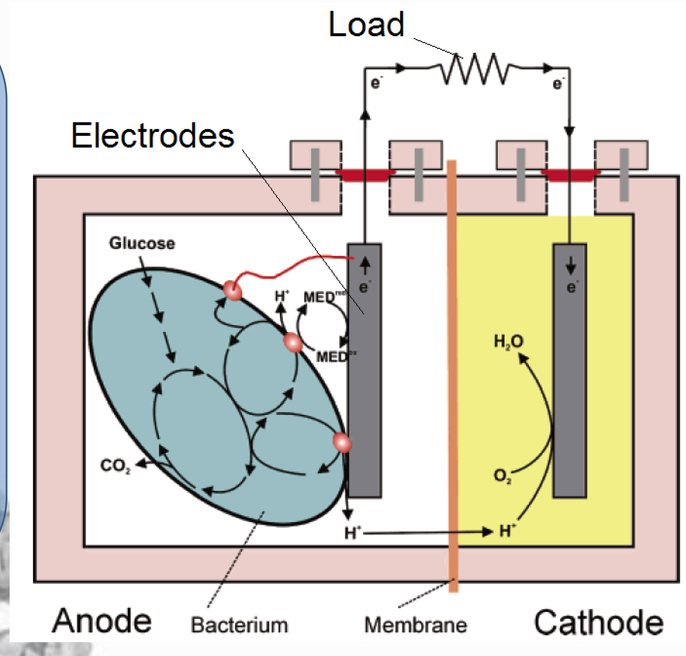

THE BIOCHEMISTRY OF THE PROCESS

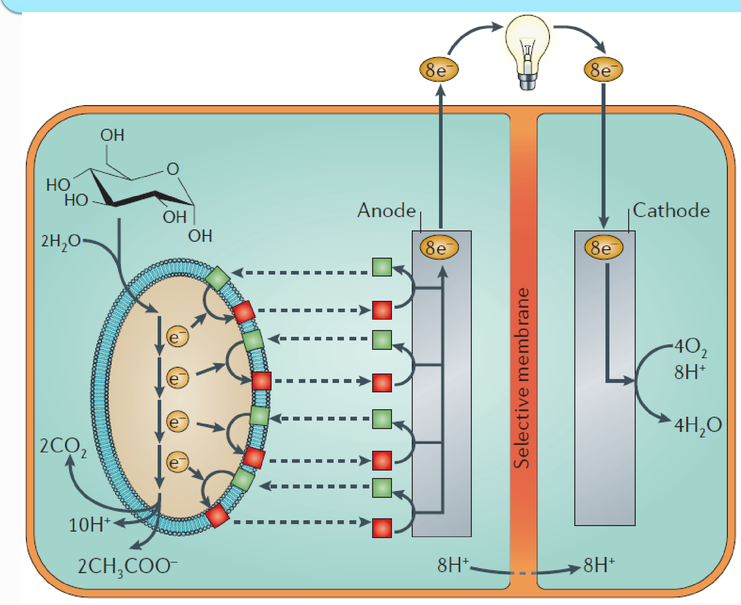

3. MEDIATORS AND THE MTR PATHWAY

The figure on the left shows the mecanism by wich the mediators are oxidized and reduced in order to transfer the electrons to the electrode.
The figure on the right show the Mtr pathway. Here we can se the proposed elements that participates on the electron extrusion from the TCA cycle to the outside of the cell through the two membranes

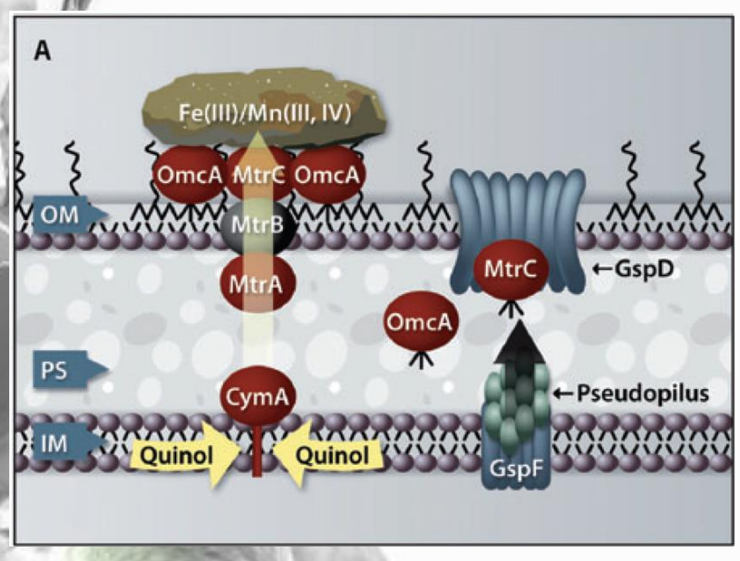

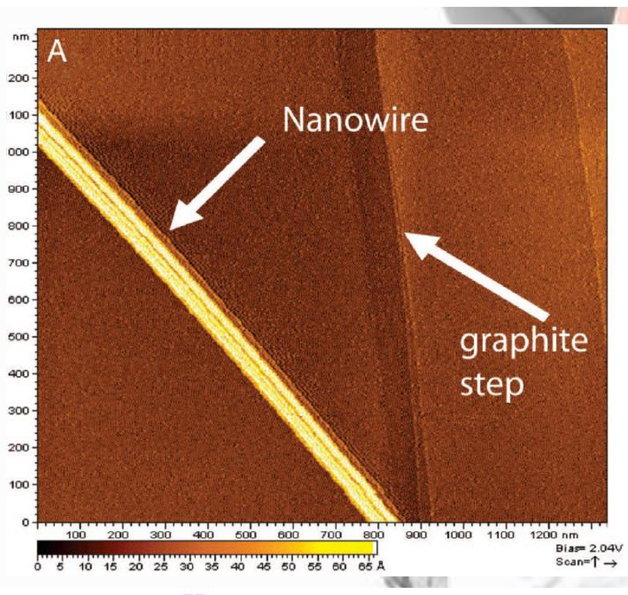

4. ELECTRON TRANSFER BY NANOWIRES

These two figures on the left shows the work of Gorby et al (2011) in wich they could determine with extremly robust experiments that the nanowires are formed in *Shewanella oneidensis* cultures, and best of all: those structures are electrogenics. These experiments are based on STM *(Scanning Tunneling Microscopy)* and showed amperage positive detection in the nanowire location. The perform the same experiments with mutant strains of MtrC and OmcA and they don't detect positive amperage. The other figure shows the filament structure trough electronic microscopy.

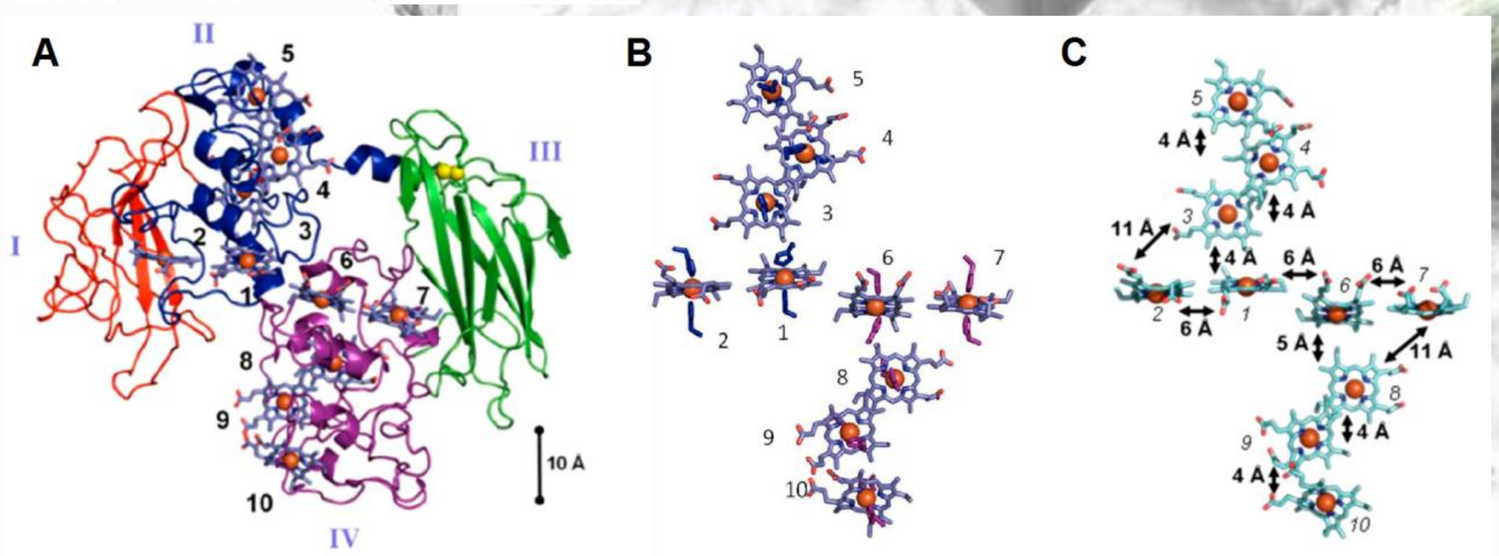

5. MEDIATORS SECRETED BY THE MICROORGANISMS

On the left we can see the crystal structure solved by Clarke et al (2010). These results allowed to conclude the explanation of the electron movements through the proteins involved in the Mtr pathway. As we can see, the most aproved hipothesis postulate that the electrons do "hopping" movements between heme groups in order to reach the outer membrane and finally reduce the oxidized electron acceptors on the outside. The arrengements of the heme groups are consistent

1.CONCLUSIONS

This bibliographic review has reach the main objectives such as determine what is a Microbial Fuell Cell and what is its basic mechanisms and reactions implied; also determine what is known nowadays about all the elements comprising the whole metabolisms of redox compounds, pilins, flavins, cytochromes, heme groups, etc and how this elements interact in order to extrude the electrons to the outside of the cell and finally reduce the electrons accpetors to finish the respiration cycle. Some objectives couldn't be accomplished, but it's not a bad thing: this is due to the fact that there is no evidence yet of strategies based on DNA tecnology, gene upregulation, or overexpression of the elements showed in this review in order to increase the electricity production yield. This arises the possibility to research more in that aspect.

1.REFERENCES

[1] **B.E. Logan et al**. Microbial Fuel Cells: Methodology and technology. *Environ Sci Technol.* (2006). X.(X). XXX-XXX.
[2] **D.R. Lovley**. Bug juice: harvesting electricity with microorganisms. *Nat Rev, Microbiol.* (2006). v4, p497-508.
[3] **Y.A. Gorby et al**. Electrically conductive bacterial nanowires produced by Shewanella oneidensis strain MR-1 and other microorganisms. *Proc Natl Acad Sci* (2006), 103:11358-11363.
[4] **D.R. Lovley, N.S. Malvankar.** Microbial nanowires for bioenergy applications. Current Opinion in Biotechnology 2014, 27:88–95
[5] **P.N. Reardon, K.T. Mueller.** Structure of the Type IVa Major Pilin from the Electrically Conductive Bacterial Nanowires of *Geobacter sulfurreducens. j biol chem* (2013). v288, 41, p.29260–29266.
[6] **T.A. Clarke et al.** Structure of a bacterial cell surface decaheme electron conduit. *Proc Natl Acad Sci* (2011) 108:9384–9389.